ЕЛЕКТРОЛУКС

Electrolux

SERVICE FACTORY EXPORT-IMPORT

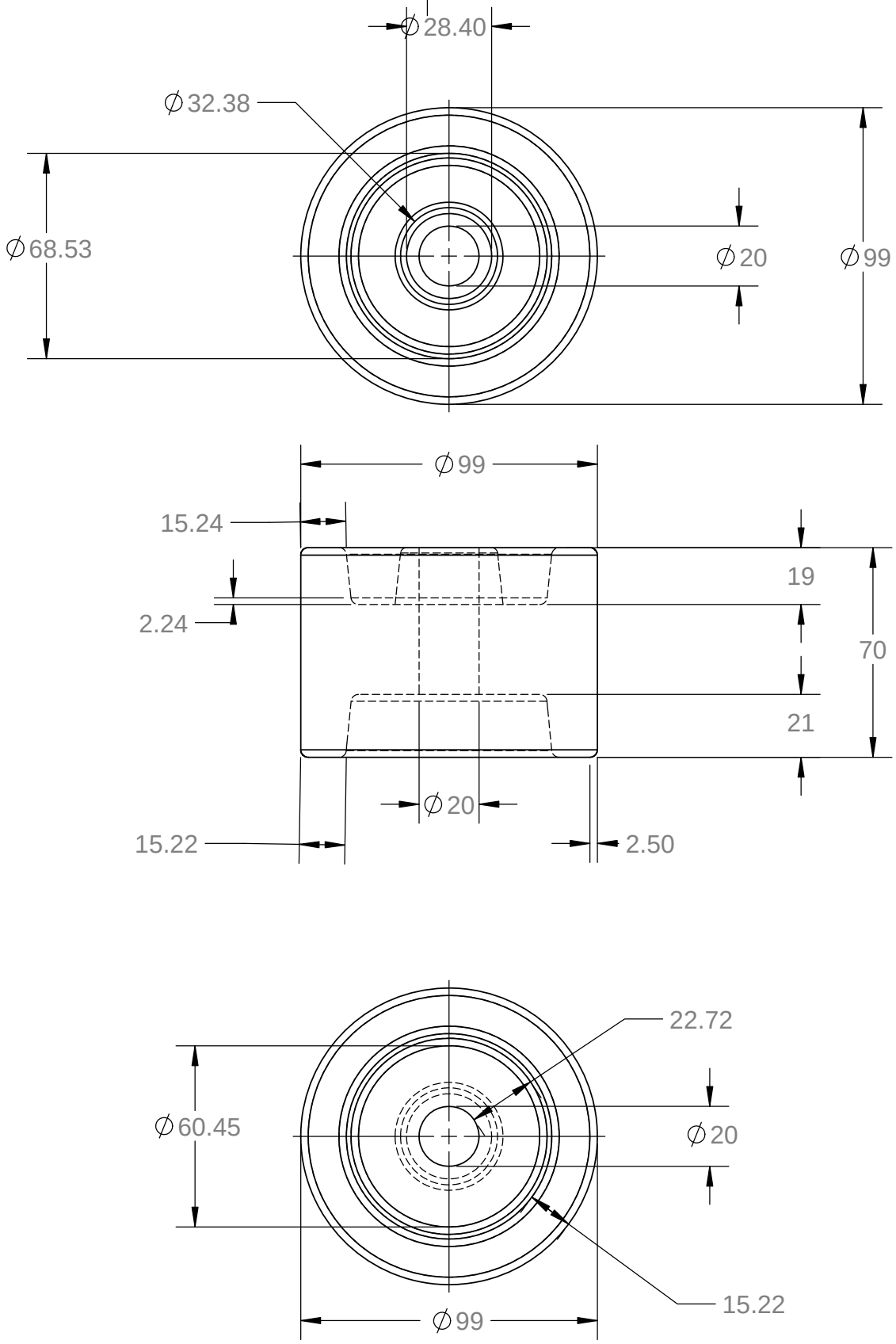

UNLESS OTHERWISE SPECIFIED: DIMENSIONS ARE IN MILLIMETERS SURFACE FINISH: TOLERANCES: LINEAR: ANGULAR:	FINISH:	DEBUR AND BREAK SHARP EDGES	DO NOT SCALE DRAWING / REVISION

	NAME	SIGNATURE	DATE
DRAWN			
CHK'D			
APPV'D			
MFG			
Q.A			

TITLE:

MATERIAL:

WEIGHT:

DWG NO. Guma 2-1

A4

SCALE:1:1

SHEET 1 OF 1

www.rubber-products.com.mk